User Manual

Mars-B1000

Date: July 2021

Doc Version: 1.0

English

Thank you for choosing our product. Please read the instructions carefully before operation. Follow these instructions to ensure that the product is functioning properly. The images shown in this manual are for illustrative purposes only.

For further details, please visit our Company's website www.zkteco.com.

Copyright © 2021 ZKTECO CO., LTD. All rights reserved.

Without the prior written consent of ZKTeco, no portion of this manual can be copied or forwarded in any way or form. All parts of this manual belong to ZKTeco and its subsidiaries (hereinafter the "Company" or "ZKTeco").

Trademark

ZKTeco is a registered trademark of ZKTeco. Other trademarks involved in this manual are owned by their respective owners.

Disclaimer

This manual contains information on the operation and maintenance of the ZKTeco equipment. The copyright in all the documents, drawings, etc. in relation to the ZKTeco supplied equipment vests in and is the property of ZKTeco. The contents hereof should not be used or shared by the receiver with any third party without express written permission of ZKTeco.

The contents of this manual must be read as a whole before starting the operation and maintenance of the supplied equipment. If any of the content(s) of the manual seems unclear or incomplete, please contact ZKTeco before starting the operation and maintenance of the said equipment.

It is an essential pre-requisite for the satisfactory operation and maintenance that the operating and maintenance personnel are fully familiar with the design and that the said personnel have received thorough training in operating and maintaining the machine/unit/equipment. It is further essential for the safe operation of the machine/unit/equipment that personnel has read, understood and followed the safety instructions contained in the manual.

In case of any conflict between terms and conditions of this manual and the contract specifications, drawings, instruction sheets or any other contract-related documents, the contract conditions/documents shall prevail. The contract specific conditions/documents shall apply in priority.

ZKTeco offers no warranty, guarantee or representation regarding the completeness of any information contained in this manual or any of the amendments made thereto. ZKTeco does not extend the warranty of any kind, including, without limitation, any warranty of design, merchantability or fitness for a particular purpose.

ZKTeco does not assume responsibility for any errors or omissions in the information or documents which are referenced by or linked to this manual. The entire risk as to the results and performance obtained from using the information is assumed by the user.

ZKTeco in no event shall be liable to the user or any third party for any incidental, consequential, indirect, special, or exemplary damages, including, without limitation, loss of business, loss of profits, business interruption, loss of business information or any pecuniary loss, arising out of, in connection with, or

 Copyright©2021 ZKTECO CO., LTD. All rights reserved.

relating to the use of the information contained in or referenced by this manual, even if ZKTeco has been advised of the possibility of such damages.

This manual and the information contained therein may include technical, other inaccuracies or typographical errors. ZKTeco periodically changes the information herein which will be incorporated into new additions/amendments to the manual. ZKTeco reserves the right to add, delete, amend or modify the information contained in the manual from time to time in the form of circulars, letters, notes, etc. for better operation and safety of the machine/unit/equipment. The said additions or amendments are meant for improvement /better operations of the machine/unit/equipment and such amendments shall not give any right to claim any compensation or damages under any circumstances.

ZKTeco shall in no way be responsible (I) in case the machine/unit/equipment malfunctions due to any non-compliance of the instructions contained in this manual (ii) in case of operation of the machine/unit/equipment beyond the rate limits (iii) in case of operation of the machine and equipment in conditions different from the prescribed conditions of the manual.

The product will be updated from time to time without prior notice. The latest operation procedures and relevant documents are available on http://www.zkteco.com

If there is any issue related to the product, please contact us.

ZKTeco Headquarters

Address ZKTeco Industrial Park, No. 32, Industrial Road,

Tangxia Town, Dongguan, China.

Phone +86 769 - 82109991

Fax +86 755 - 89602394

For business-related queries, please write to us at: sales@zkteco.com.

To know more about our global branches, visit www.zkteco.com.

Copyright©2021 ZKTECO CO., LTD. All rights reserved.

About the Company

ZKTeco is one of the world's largest manufacturer of RFID and Biometric (Fingerprint, Facial, Finger-vein) readers. Product offerings include Access Control readers and panels, Near & Far-range Facial Recognition Cameras, Elevator/floor access controllers, Turnstiles, License Plate Recognition (LPR) gate controllers and Consumer products including battery-operated fingerprint and face-reader Door Locks. Our security solutions are multi-lingual and localized in over 18 different languages. At the ZKTeco state-of-the-art 700,000 square foot ISO9001-certified manufacturing facility, we control manufacturing, product design, component assembly, and logistics/shipping, all under one roof.

The founders of ZKTeco have been determined for independent research and development of biometric verification procedures and the productization of biometric verification SDK, which was initially widely applied in PC security and identity authentication fields. With the continuous enhancement of the development and plenty of market applications, the team has gradually constructed an identity authentication ecosystem and smart security ecosystem, which are based on biometric verification techniques. With years of experience in the industrialization of biometric verifications, ZKTeco was officially established in 2007 and now has been one of the globally leading enterprises in the biometric verification industry owning various patents and being selected as the National High-tech Enterprise for 6 consecutive years. Its products are protected by intellectual property rights.

About the Manual

This manual introduces the operations of **Mars-B1000**.

All figures displayed are for illustration purposes only. Figures in this manual may not be exactly consistent with the actual products.

Features and parameters with ★ are not available in all devices.

Copyright©2021 ZKTECO CO., LTD. All rights reserved.

Document Conventions

Conventions used in this manual are listed below:

GUI Conventions

For Software	
Convention	**Description**
Bold font	Used to identify software interface names e.g. **OK**, **Confirm**, **Cancel**.
>	Multi-level menus are separated by these brackets. For example, File > Create > Folder.
For Device	
Convention	**Description**
< >	Button or key names for devices. For example, press <OK>.
[ ]	Window names, menu items, data table, and field names are inside square brackets. For example, pop up the [New User] window.
/	Multi-level menus are separated by forwarding slashes. For example, [File/Create/Folder].

Symbols

Convention	Description
	This represents a note that needs to pay more attention to.
	The general information which helps in performing the operations faster.
	The information which is significant.
	Care taken to avoid danger or mistakes.
	The statement or event that warns of something or that serves as a cautionary example.

Copyright©2021 ZKTECO CO., LTD. All rights reserved.

Table of Contents

1 OVERVIEW 6

1.1 CHASSIS DESIGN AND DIMENSIONS 6
1.2 MECHANICAL SYSTEM 7
1.3 ELECTRONIC CONTROL SYSTEM 7
1.4 WORKING PRINCIPLE 8
1.5 SYSTEM COMPOSITION 8
1.6 TECHNICAL SPECIFICATIONS 9
1.7 ANTI-COLLISION FORCE PARAMETERS 10

2 FUNCTION INTRODUCTION 11

2.1 FINGERPRINT VERIFICATION 11
2.2 CARD VERIFICATION 12
2.3 QR CODE VERIFICATION 13
2.4 FACIAL VERIFICATION★ 14
2.5 WIRELESS REMOTE CONTROL★ 16

3 MENU INTRODUCTION 17

3.1 PASSWAY SET 18
3.1.1 GATE SYSTEM SETTINGS 19
3.1.2 GATE FUNCTION SETTINGS 20
3.2 USB UPGRADE 26

4 CONNECTION TERMINAL AND WIRING DIAGRAM 28

4.1 CONTROL PANEL CONNECTION TERMINAL 28
4.2 WIRING DIAGRAM AND FUNCTIONS 29

5 CONNECTION WITH ZKBIOSECURITY 31

5.1 TCP/IP COMMUNICATION SETTINGS 31
5.2 WIFI COMMUNICATION SETTINGS 32
5.3 4G COMMUNICATION★ 34

6 PERSONNEL MANAGEMENT 36

7 PACKING LIST 37

8 MAINTENANCE 38

8.1 CHASSIS MAINTENANCE 38
8.2 MOVEMENT MAINTENANCE 38
8.3 POWER SUPPLY MAINTENANCE 38

9 TROUBLESHOOTING 39

Copyright©2021 ZKTECO CO., LTD. All rights reserved.

1 Overview

The Mars-B1000 swing barrier turnstile is an elegant cost-effective entrance control system designed for high-traffic volume. The Mars-B1000 barriers are normally held in a locked position, thus denying access to the secured side. When the Mars-B1000 correctly identifies the user's Card (RFID)/Fingerprint/QR code, etc. to verify the identity, its barriers swing automatically, thus allowing users passage to the secured side.

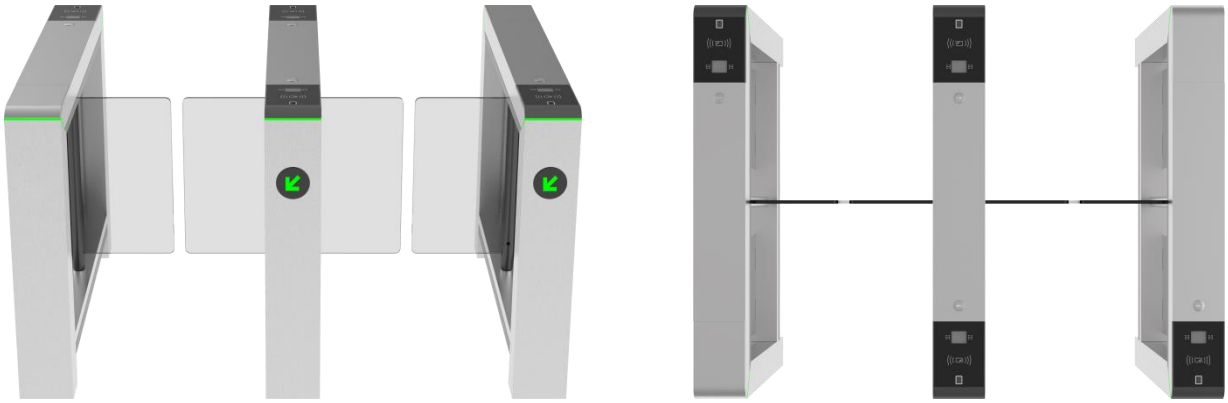

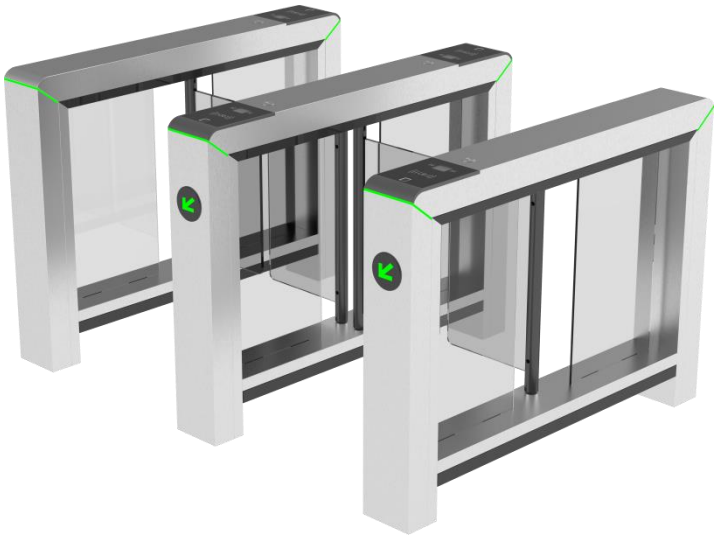

1.1 Chassis Design and Dimensions

The device has a stainless steel plate stamp form that makes it anti-rust and durable. The Acrylic panel provides simple and beautiful design with corrosion protection. It provides orderly and civilized passage to the persons and restricts illegal personnel access. In case of emergencies, it ensures that evacuation passage runs smoothly and is convenient for personnel.

Copyright©2021 ZKTECO CO., LTD. All rights reserved.

Mars-B1000's appearance and dimensions are shown below:

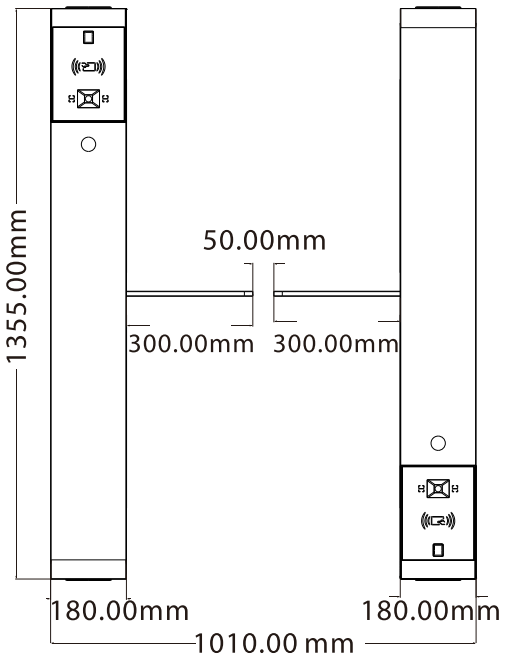

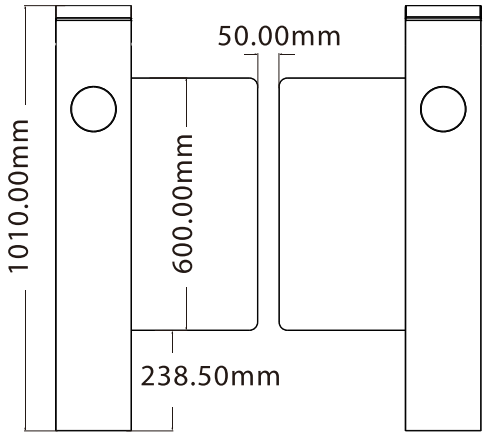

1.2 Mechanical System

The mechanical system of the swing barrier turnstile includes the chassis and the core component. The chassis is a carrier where the Direction indicator, Reader, QR code scanner, Fingerprint sensor, Infrared sensor, and the Door lock are installed. The core component mainly consists of the Motor, Frame, Bearing, and swing Arm.

1.3 Electronic Control System

The electronic control system of a swing barrier turnstile is mainly composed of the Card Reader/Fingerprint sensor/QR code, Turnstile control board, Infrared Sensor, Direction Indicator and Alarm.

Reader: The reader reads the data in the card and sends it to the Access Controller.

Fingerprint sensor: The device compares the fingerprint that is being pressed onto the fingerprint sensor with all the fingerprint data and sends it to the Access Controller.

QR code sensor: The sensor compares the acquired QR code with all QR code data registered in the device and sends it to the Access Controller.

Turnstile control board: The turnstile control board is the system's control center that receives signals from the reader and the photoelectric switch performs logical calculation and processing of these signals and sends executive commands to the Direction indicator, electric motor and the alarm.

Copyright©2021 ZKTECO CO., LTD. All rights reserved.

Infrared Sensor: It detects the position of the pedestrian and plays the role of safety protection.

Direction Indicator: This indicator displays the pedestrian passage path and directs them to pass through the lane in a safe and orderly manner.

Alarm: The alarm gives an alarm voice if the system detects any unauthorized entry to the passage.

1.4 Working Principle

1. After powering on to the device, the system performs the Power-On Self-Test.
2. When a valid Card/Fingerprint/QR code is detected, the buzzer will give a positive audible prompt to the pedestrian, indicating that successfully verified. And then, the reader sends signals to the Access Controller to request permission to pass through the passage. The Access Controller will send the signal to the master control panel.
3. After receiving the signal from the Access Controller, the turnstile control board sends valid control signals to the direction indicator and the electric motor. At last the direction arrow turns green.
4. Pedestrians passes through the passage according to the direction indicator signs. Infrared sensors keep on detecting the pedestrian during the whole process, and continue to send signal to the master control board until the pedestrian passes completely through the passage.
5. If the pedestrian enters the passage but forgets to verify identification, or if the card held/fingerprint/QR code by the pedestrian is invalid, the system will prompt an audible alarm to stop and retreat the pedestrian from the passage. The pedestrian can pass through the passage only after a valid card/fingerprint/QR code is successfully verified.

1.5 System Composition

The single-lane management system is composed of two single-core swing barriers. The multi-lane management system is composed of two single-core barriers and multiple dual-core barriers.

Working modes of the system

To make the product more versatile, this system provides multiple working modes for the user, including Normal working mode, Normally open mode, Normally close mode and Testing mode.

Normal Working Mode: In this working mode, the turnstile works normally.

Normal Open Mode: In this working mode, the turnstile is always open.

Normal Close Mode: In this working mode, the turnstile is always closed.

Testing Mode: In this working mode, the turnstile performs auto-test.

Copyright©2021 ZKTECO CO., LTD. All rights reserved.

1.6 Technical Specifications

Feature	Specification
Communication	TCP/IP, RS485, 4G/WIFI
Input Voltage	AC110V to 220V, 50 Hz to 60Hz
Input Control Signal	Switching Signal
Output Voltage	DC 24V
Protection Level	IP34
Time of Gate Opening/Closing	Minimum 1 Second
Relative Humidity	＜95% (Non-condensing)
Temperature	-25°C to 65°C (Standard) -40°C to 80°C (Optional)
Throughput Rate	Maximum 25 persons/minute
Motor	Brushless Motor
Infrared Sensors	6~12 Pairs
Working Environment	Indoor/Outdoor (if sheltered)
Dimension(mm) (L*W*H)	1355*180*1010
Noise	＜60dB
Certifications	CE, FCC

Copyright©2021 ZKTECO CO., LTD. All rights reserved.

1.7 Anti-collision Force Parameters

The swing arm can withstand shaking of 400N.

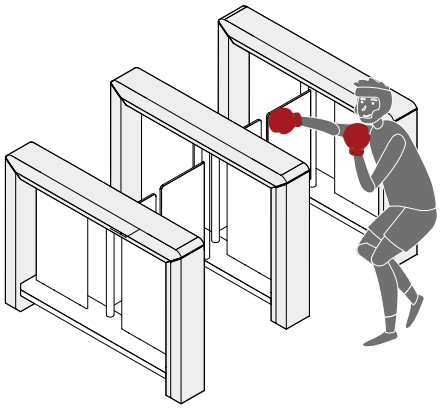

⚠ The picture only shows the anti-collision level, please do not damage the device.

Copyright©2021 ZKTECO CO., LTD. All rights reserved.

2 Function Introduction

2.1 Fingerprint Verification

In this verification mode, the device compares the fingerprint that is being pressed onto the fingerprint reader with all the fingerprint data sends it to the Access Controller.

The device enters the fingerprint authentication mode when a user presses his/her finger onto the fingerprint scanner.

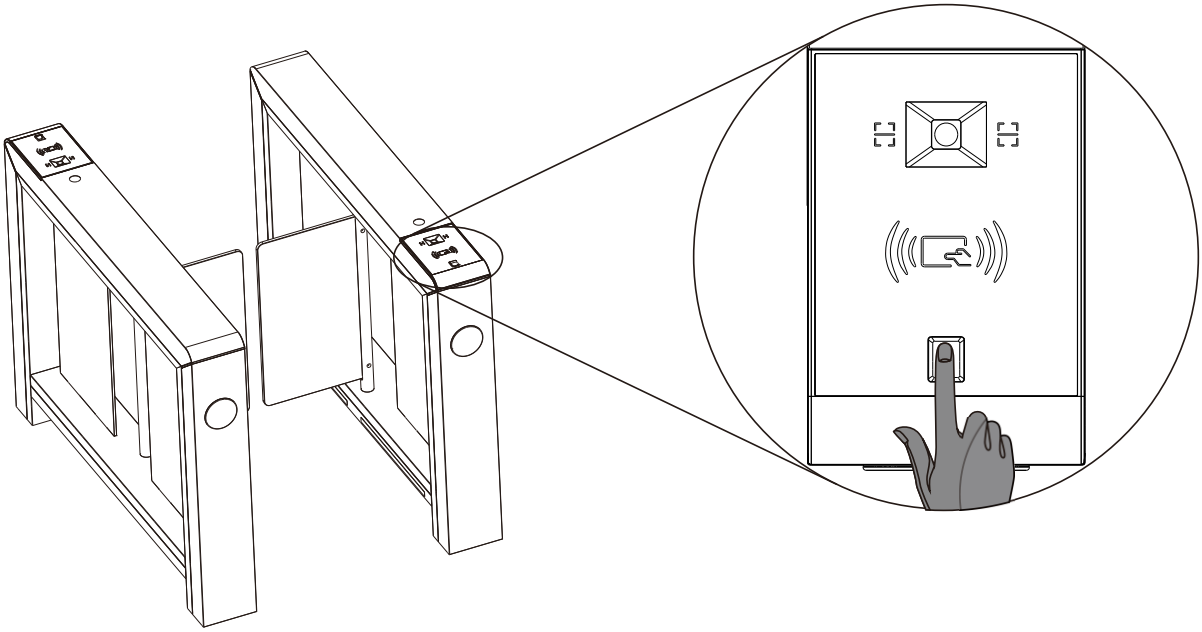

Recommended fingers: It is recommended to use index, middle, or ring finger for registration and avoid using the thumb or little finger, as they are difficult to accurately press onto the fingerprint reader.

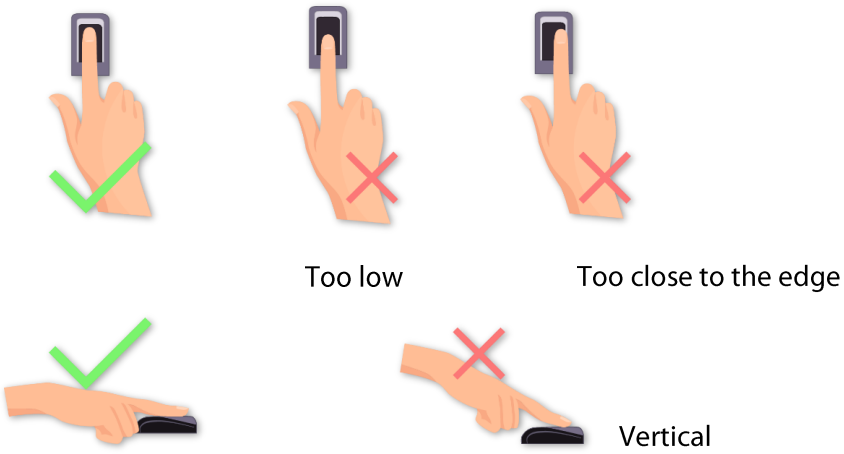

Copyright©2021 ZKTECO CO., LTD. All rights reserved.

Note: Please use the correct method when pressing your fingers onto the fingerprint reader for registration and identification. Our company will assume no liability for recognition issues that may result from incorrect usage of the product. We reserve the right of final interpretation and modification concerning this point.

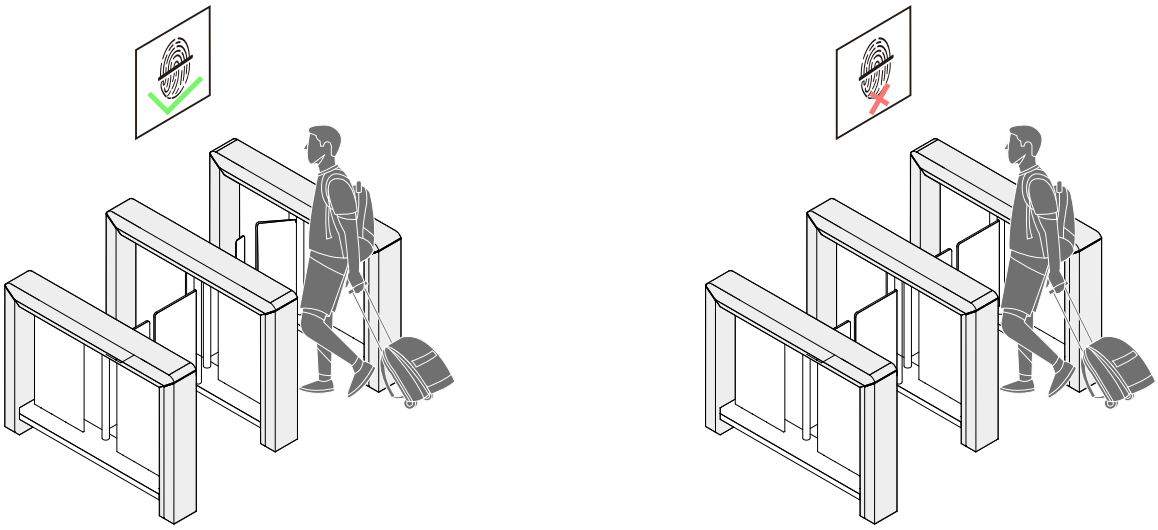

2.2 Card Verification

The Card Verification mode compares the card number in the card induction area with all the card number data registered in the device and sends it to the Access Controller.

The device enters the card authentication mode when a user presses his/her card to the card reading area.

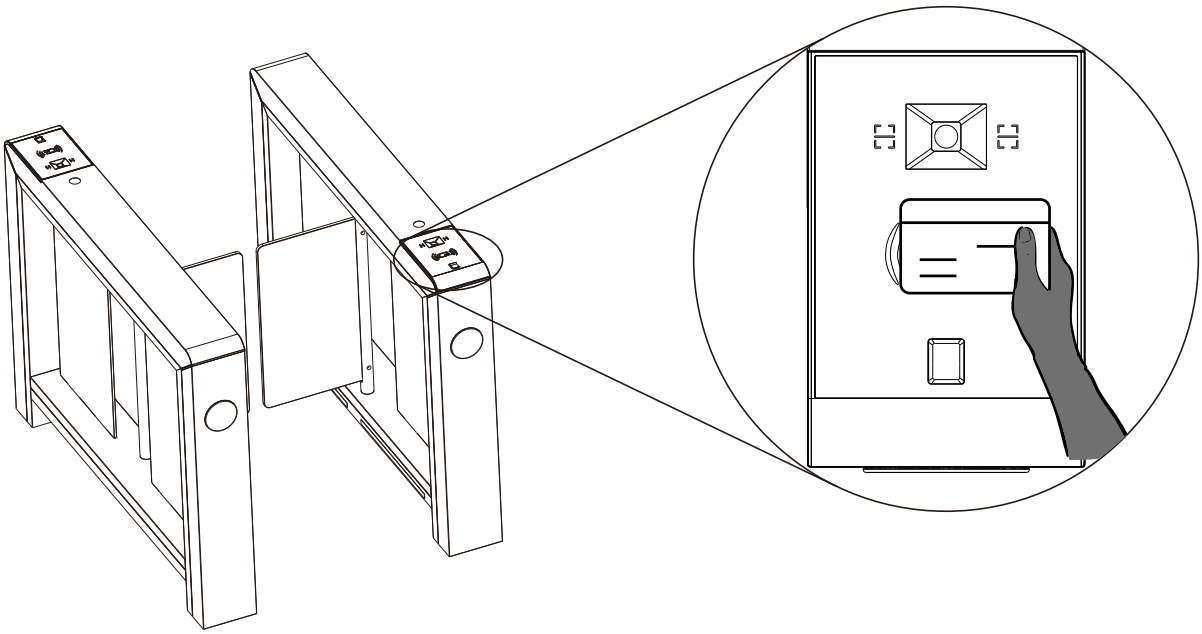

Copyright©2021 ZKTECO CO., LTD. All rights reserved.

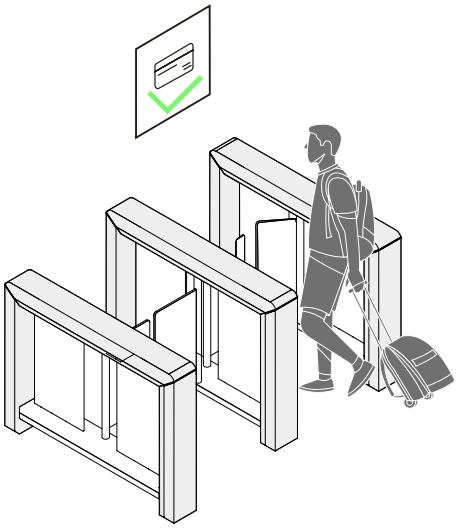

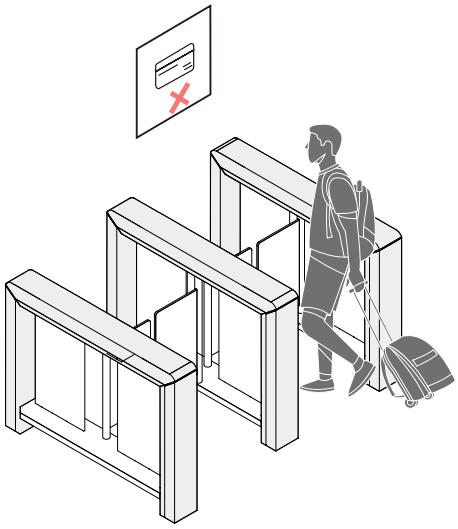

2.3 QR code Verification

The QR code Verification mode is to scan the QR code on the user's mobile phone through the QR code scanner and compare the data with the registered QR code, and then sends it to the Access Controller.

When the user places the mobile phone displaying with the QR code on top of the QR code scanner, the device enters the QR code authentication mode.

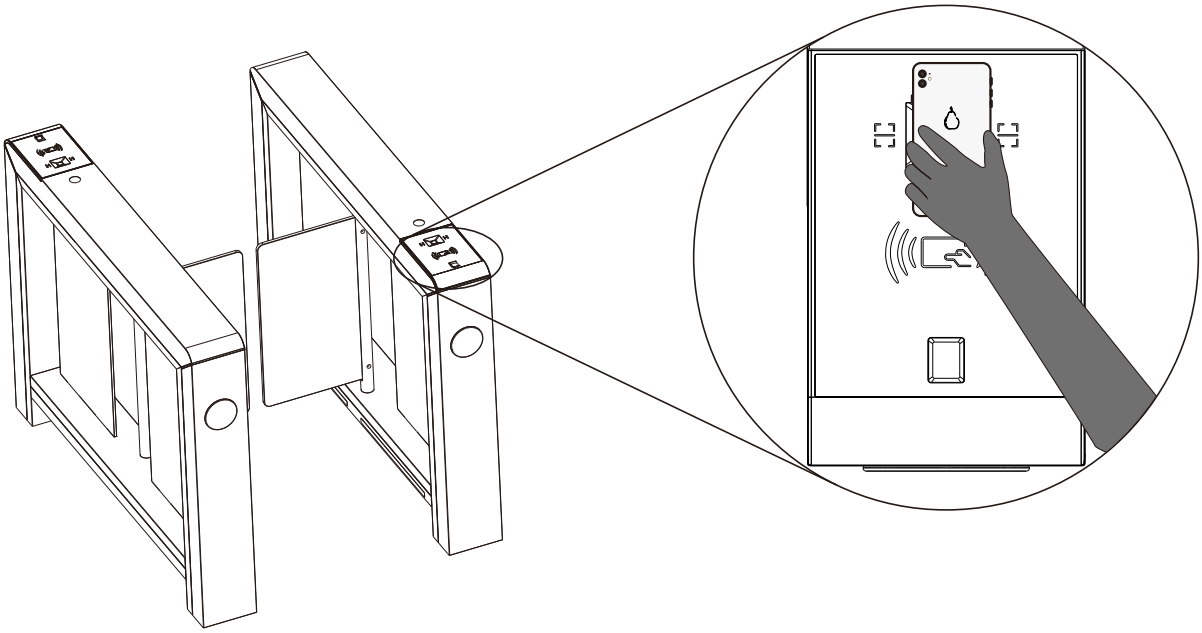

Copyright©2021 ZKTECO CO., LTD. All rights reserved.

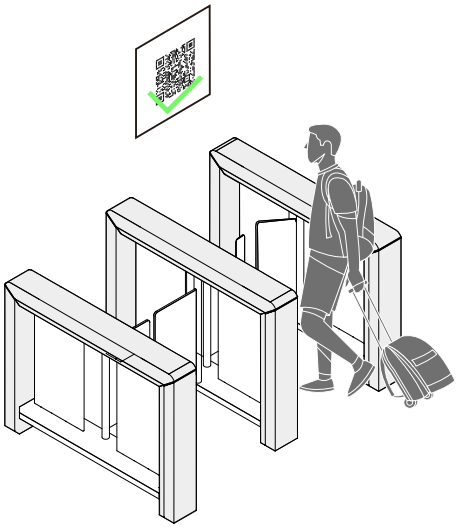

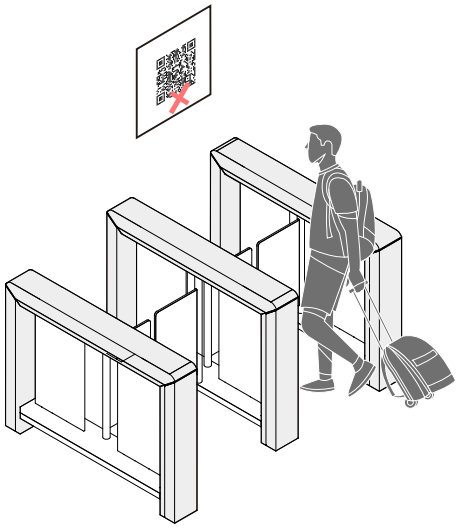

2.4 Facial Verification★

In this verification mode, the device compares the collected facial images with all face data registered in the device and then sends it to the Access Controller.

Try to keep the face in the centre of the screen during authentication. Please face towards the camera and stay still during face registration.

Recommended Standing Posture and Facial Expression:

Note: Please keep your facial expression and standing posture natural while enrollment or verification.

Copyright©2021 ZKTECO CO., LTD. All rights reserved.

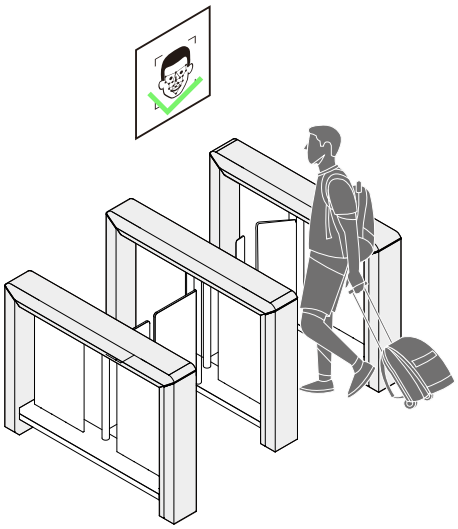

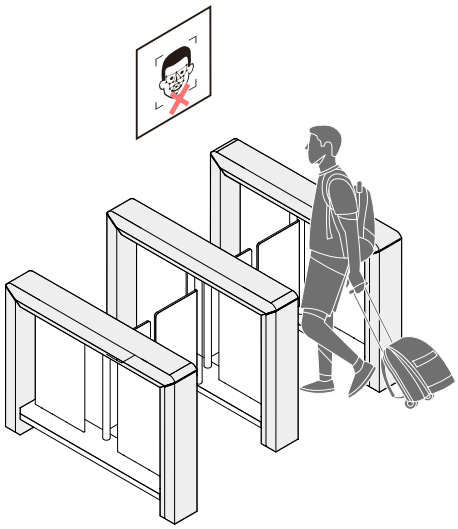

Installation on the barrier gate:

1. Please pass the wire through the bracket before installation.
2. Insert the bracket into the hole and fix it with a nut.
3. Adjust the angle of the device.

Copyright©2021 ZKTECO CO., LTD. All rights reserved.

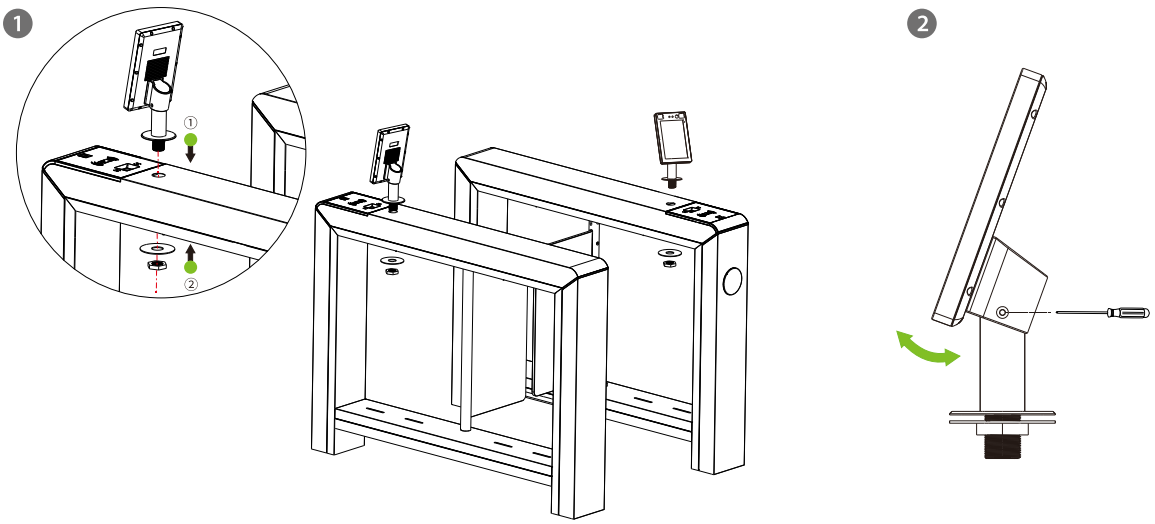

2.5 Wireless Remote Control★

The wireless remote control of swing barrier turnstile is an intelligent device that remote controls the entrance and exit. It is designed for manual control of the swing barrier turnstile by the administrator. The wireless remote control has four buttons A, B, C, and D, corresponding to the options open entrance gate, open exit gate, emergency mode open-bar pass, and alarm lock.

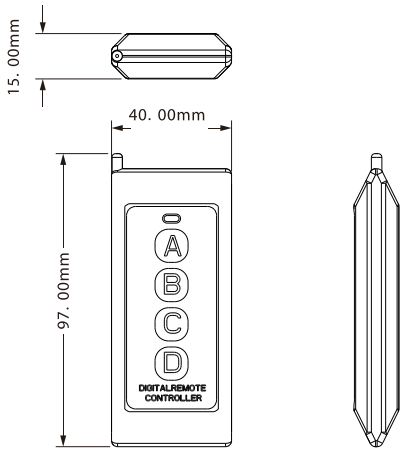

Buttons	Description
A	Press the button once to open the swing barrier turnstile on the entrance and can pass by verification from the entrance.
B	Press the button once to open the swing barrier turnstile on the exit and can pass by verification from the exit.
C	In emergency mode, press the button once to open the gate. Then the entrance and exit sides gate open and can pass freely without verification.
D	Press the button once to close the gate. Then the entrance and exit sides are controlled by the swing barrier turnstile. The verification becomes invalid, and no pass is allowed.

Copyright©2021 ZKTECO CO., LTD. All rights reserved.

3 Menu Introduction

The Mars-B1000 are combined with hardware and software through the INBIO-PGATES Network Passway, It has a 2.8-inch touch screen (the display screen) where the parameters can be set via touch screen. It is a modernized security management system.

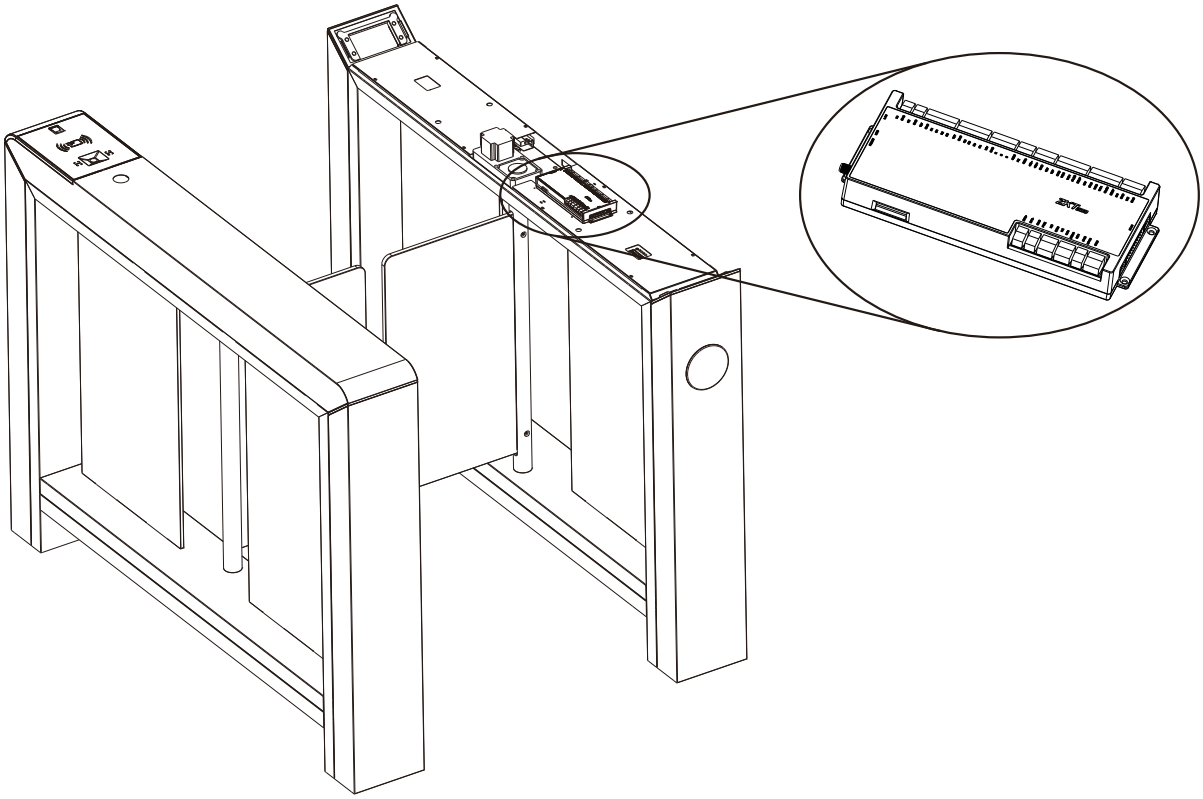

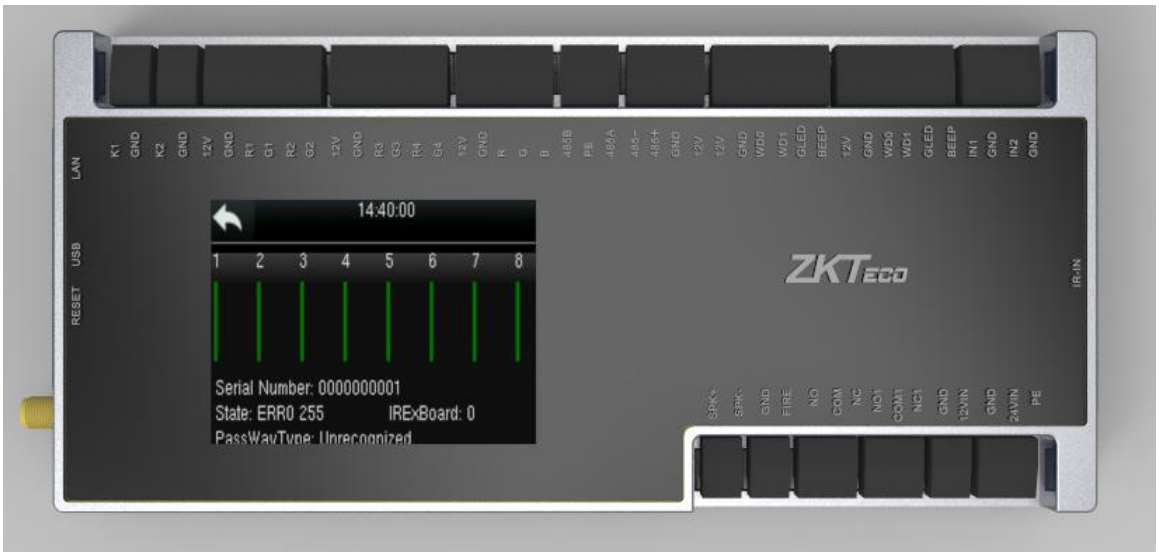

Copyright©2021 ZKTECO CO., LTD. All rights reserved.

On the **Main Screen/Initial Interface**, tap on to go to the Main Menu.

Menu Functions

Menu Options	Function Description
COMM.	To set the relevant parameters of Ethernet, 4G★, WIFI, Cloud Server.
System	To set the parameters related to the system, including Date Time, Fingerprint templates, Delete User Information, Reset and USB Upgrade.
Autotest	To automatically test whether each module functions properly, including the LCD, Audio and Real-time Clock.
System Info	To view the Data Capacity, Device and Firmware information.
Passway Set	To set the relevant parameters of Gate.

3.1 Passway Set

On the **Main Menu** interface, tap on **Passway Set** to go to the interface.

On this interface, one can set the parameters like Gate passing mode and the opening and closing speed of the barrier on the connected gates.

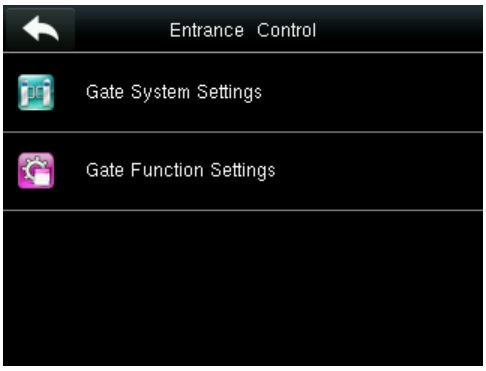

Copyright©2021 ZKTECO CO., LTD. All rights reserved.

3.1.1 Gate System Settings

On the **Passway Set** interface, tap on **Gate System Setting** to set the Gate System.

Function available in Gate System Settings:

Motor Driver Board Type

The motor drive type is automatically matched and subitems cannot be modified as an information reference.

Gate Opening Speed

Sets the speed to open the gate. The smaller the number is set, the faster the speed, and the value can be set between 1 to 100 seconds.

Gate Opening Deceleration Distance

The smaller the number, the shorter the deceleration time, and the valid value is 10 to 25.

Gate Opening Deceleration Speed

The smaller the number is, the faster the deceleration, and the valid value is 2 to 30.

Gate Closing Speed

Sets the speed to close the gate. The smaller the number is set, the faster the speed, and the value can be set between 1 to 100 seconds.

Gate Closing Deceleration Distance

The smaller the number, the shorter the deceleration time, and the valid value is 10 to 25.

Gate Closing Deceleration Speed

The smaller the number is, the faster the deceleration, and the valid value is 2 to 30.

Force Adjustment

The smaller the number, the greater the efficiency of the gate opening and closing force, valid value: 5~50.

Brake Distance

The opening angle of the arm which is pushed unauthorizedly, and the valid value is 1 to 100.

Limit Adjustment

You can set the adjustment of the right open limit, the left open limit and the closing limit of the gate.

Swing Arm Type

Sets the swing arm type. The types are Ordinary Swing Door and Extra Wide Swing Door.

Infrared Expansion Board

Enable or disable infrared expansion board as per the requirement.

Copyright©2021 ZKTECO CO., LTD. All rights reserved.

IR Quantity

Emission range infrared supported by the device, and the valid value is 1 to 65535.

Offline Using

Enable or disable offline using as per the requirement.

Clear Running Records

Clears all the running records.

Test Mode

Test the left opening, right opening and closing of the gate.

3.1.2 Gate Function Settings

On the **Passway Set** interface, tap on **Gate Function Setting** to set the Gate Function.

Function available in Gate Function Settings:

Passing Mode

Two-way control (default)

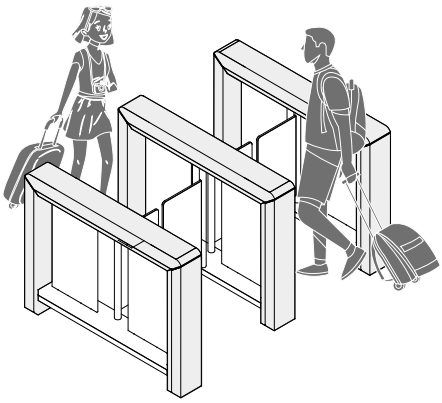

In control, out free

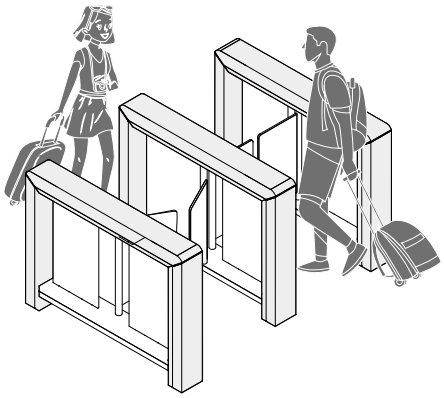

In free, out control

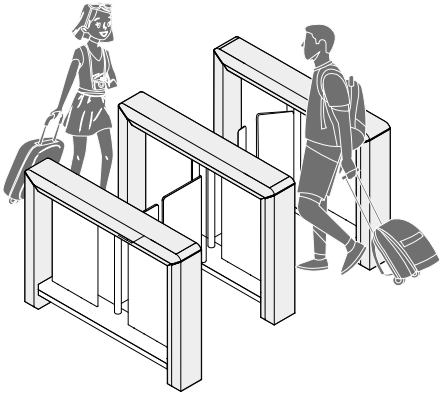

Two-way free

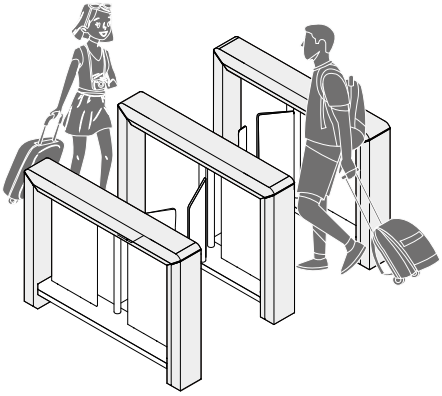

Copyright©2021 ZKTECO CO., LTD. All rights reserved.

In control, out forbidden

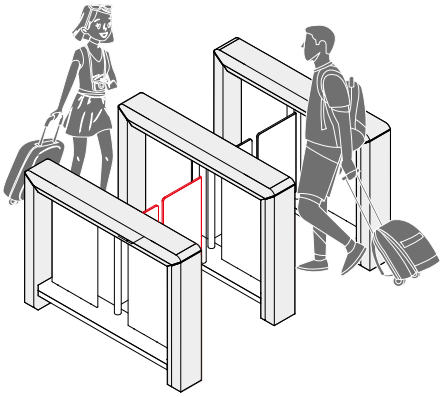

In forbidden, out control

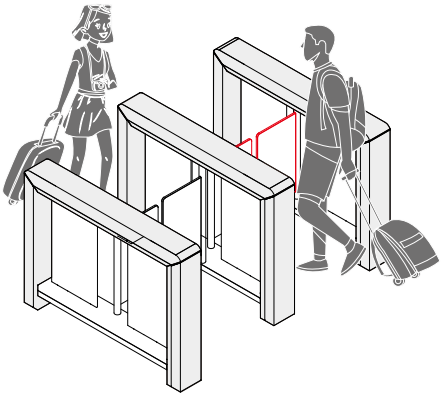

In free, out forbidden

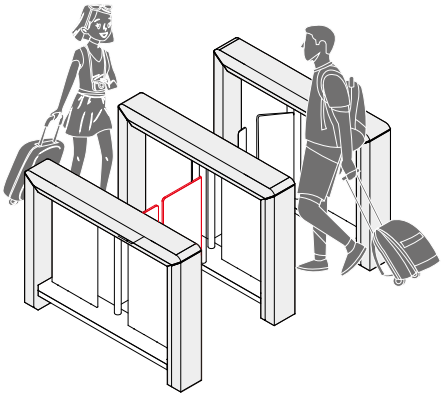

In forbidden, out free

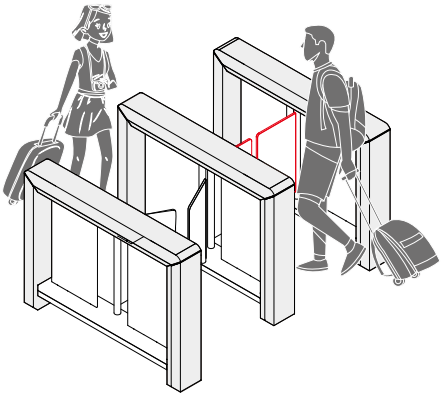

Two-way forbidden

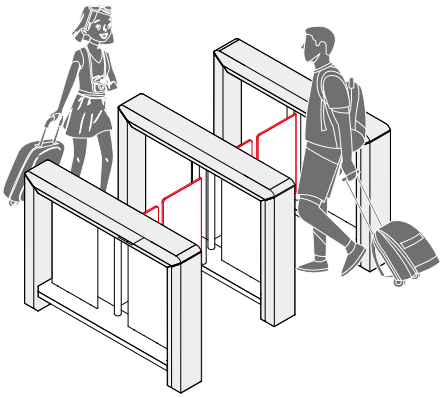

Two-way normally open

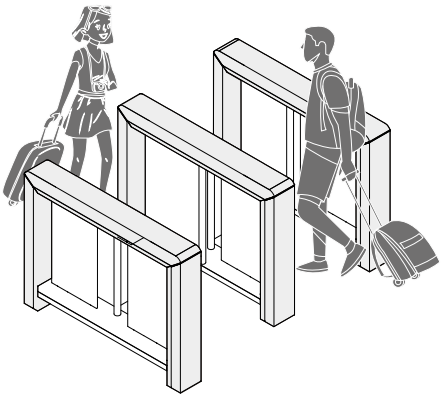

Clutch Alarm Setting

The way to unlock the gate which is pushed in an unauthorized way and the clutch is locked automatically. It can be set as Automatic release or Authorized release.

Copyright©2021 ZKTECO CO., LTD. All rights reserved.

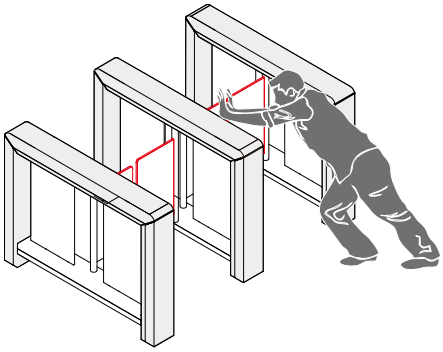

Anti-pinch Area Setting

It can be set as anti-pinch area, anti-pinch in the channel or no anti-pinch at head and tail.

Anti-pinch in the channel

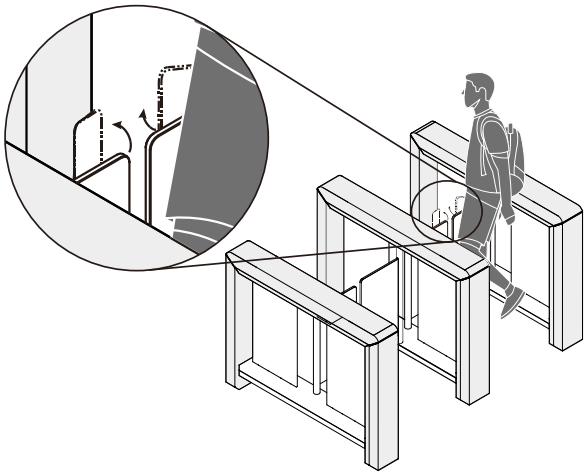

No anti-pinch at head and tail

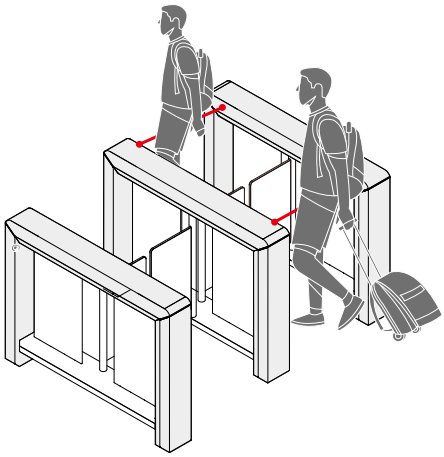

Anti-pinch Action Setting

This can be set as anti-pinch to stop, anti-pinch to open gate or disabled.

False Direction Entry

This can be set as reverse break-in to close gate, not close gate or disabled.

Close gate

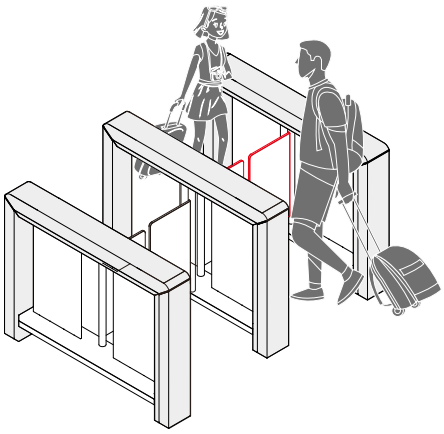

Not close gate

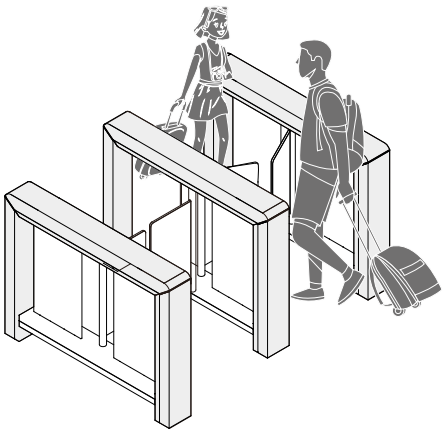

Copyright©2021 ZKTECO CO., LTD. All rights reserved.

Anti-tailgate Setting

It can be set as anti-tailgate to close gate, not close gate or disabled.

Close gate

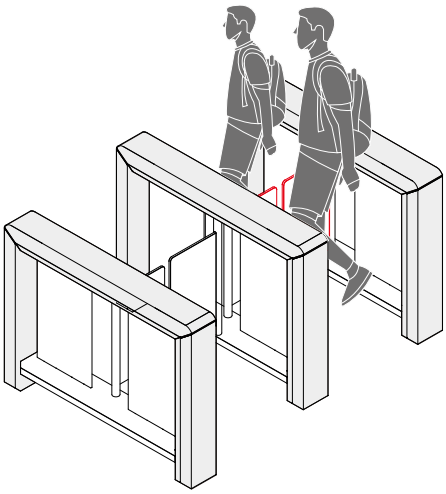

Not close gate

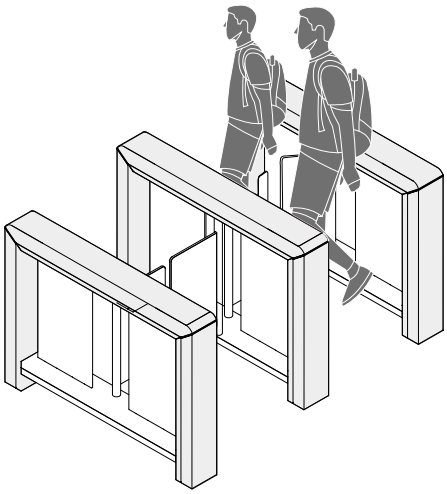

Verification Mode

The verification mode can be set as Allow verification in channel, or No verification allowed in channel.

Allow verification in channel

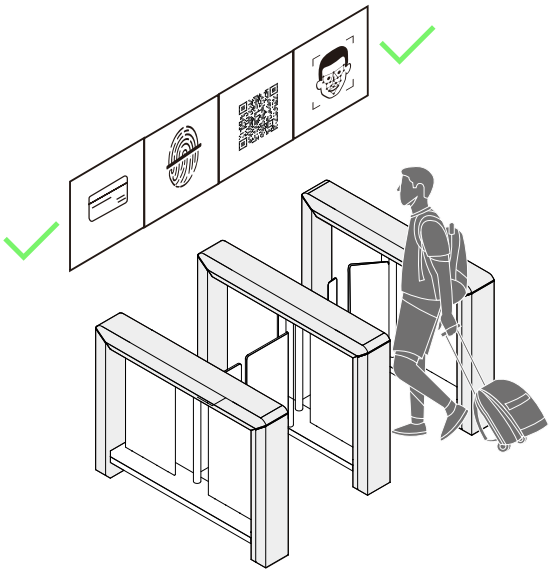

No verification allowed in channel

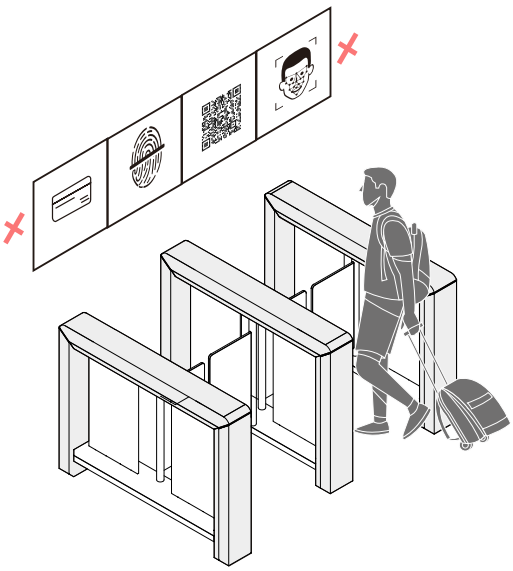

Copyright©2021 ZKTECO CO., LTD. All rights reserved.

Memory Function

When more than two legal access signals are given at the same time (including the same direction and the opposite direction), the system will remember all the pass requests and complete each pass in turn.

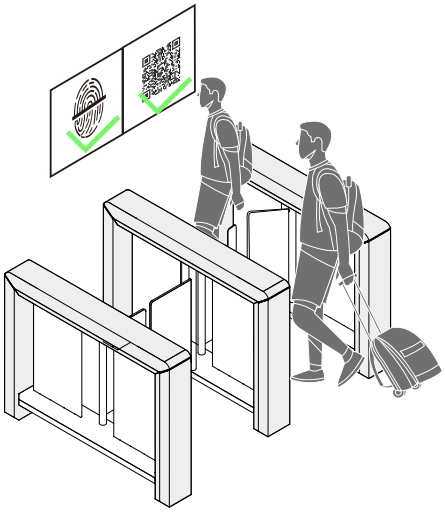

Stay Duration Time

Set the duration of stay in the channel after successful verification, with a valid value of 0 to 60 seconds.

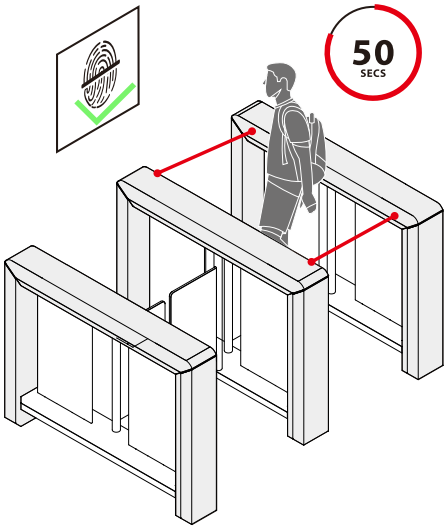

Copyright©2021 ZKTECO CO., LTD. All rights reserved.

Open Duration Time

It can be set as the unattended time, and the valid value is 2 to 60 seconds, the gate will close within the set time. The larger the number set, the slower the closing time.

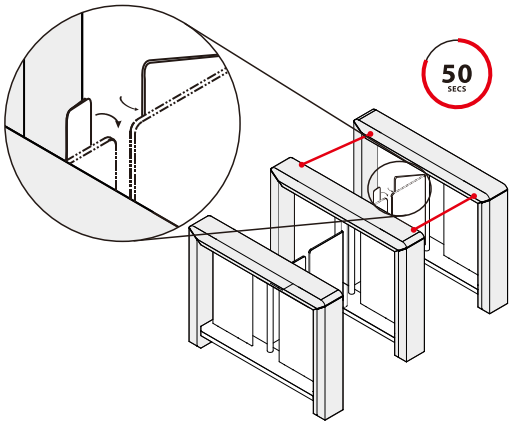

Gate Closing Delay Time

Here set the gate closing delay time, and the valid value is 0 to 60 seconds, the gate will be delayed to close according to the set time. The larger the number set, the longer the closing time.

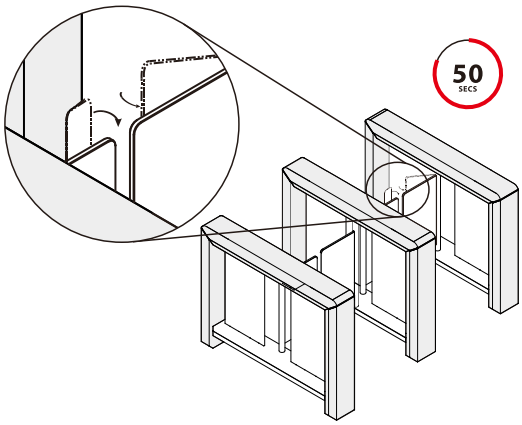

Fire Mode

According to the external fire equipment, select the corresponding type of trigger mode. You can set as entry opening, exit opening or disabled.

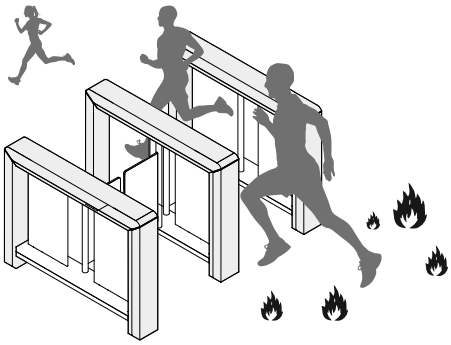

Copyright©2021 ZKTECO CO., LTD. All rights reserved.

Volume Setting

Adjust the volume of the device, and the valid value is 0 to 100.

Alarm Tone Setting

Enable or disable the alarm tone.

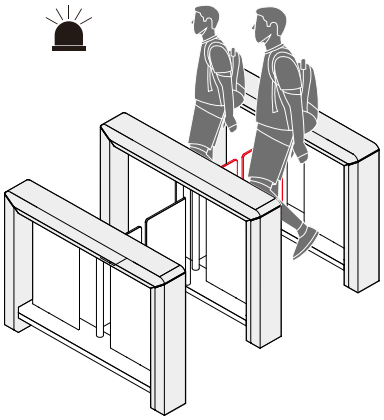

In/Out Exchange

Switch the direction of the entrance and exit.

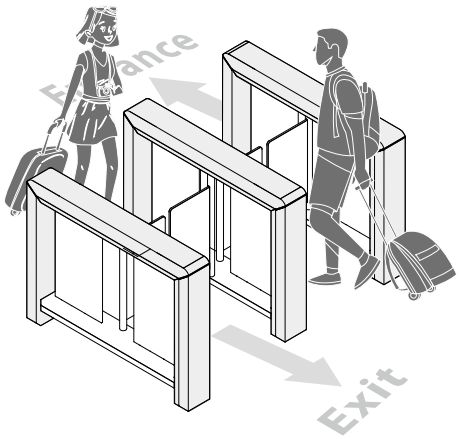

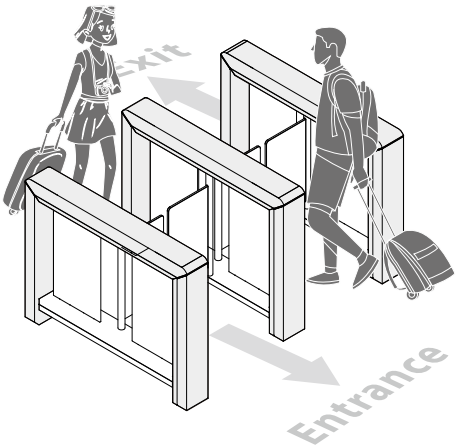

Reset Counter

It can be set as Clear all counters, Clear the entry counter, Clear the exit counter or Clear the alarm counter.

3.2 USB Upgrade

On the **Main Menu** interface, tap on **System** to go to the interface. And then tap **USB Upgrade** on the **System** interface.

The device's firmware program can be upgraded with the upgrade file in a USB drive. Before conducting this operation, please ensure that the USB drive contains the correct upgrade file and is properly inserted into the device.

Copyright©2021 ZKTECO CO., LTD. All rights reserved.

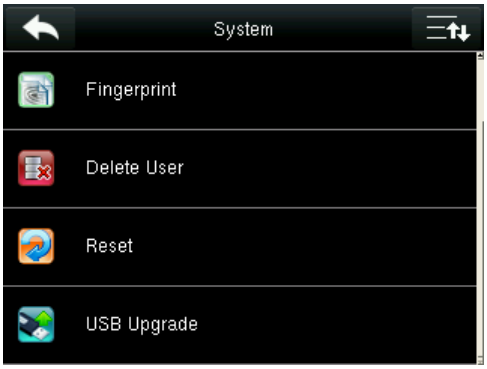

If no USB disk is inserted in, the system gives the following prompt after you tap **USB Upgrade** on the System interface.

Note: If upgrade file is needed, please contact our technical support. Firmware upgrade is not recommenced under normal circumstances.

For more details, please refer to the **INBIO-PGATES Network Passway** User Manual.

Copyright©2021 ZKTECO CO., LTD. All rights reserved.

4 Connection Terminal and Wiring Diagram

4.1 Control Panel Connection Terminal

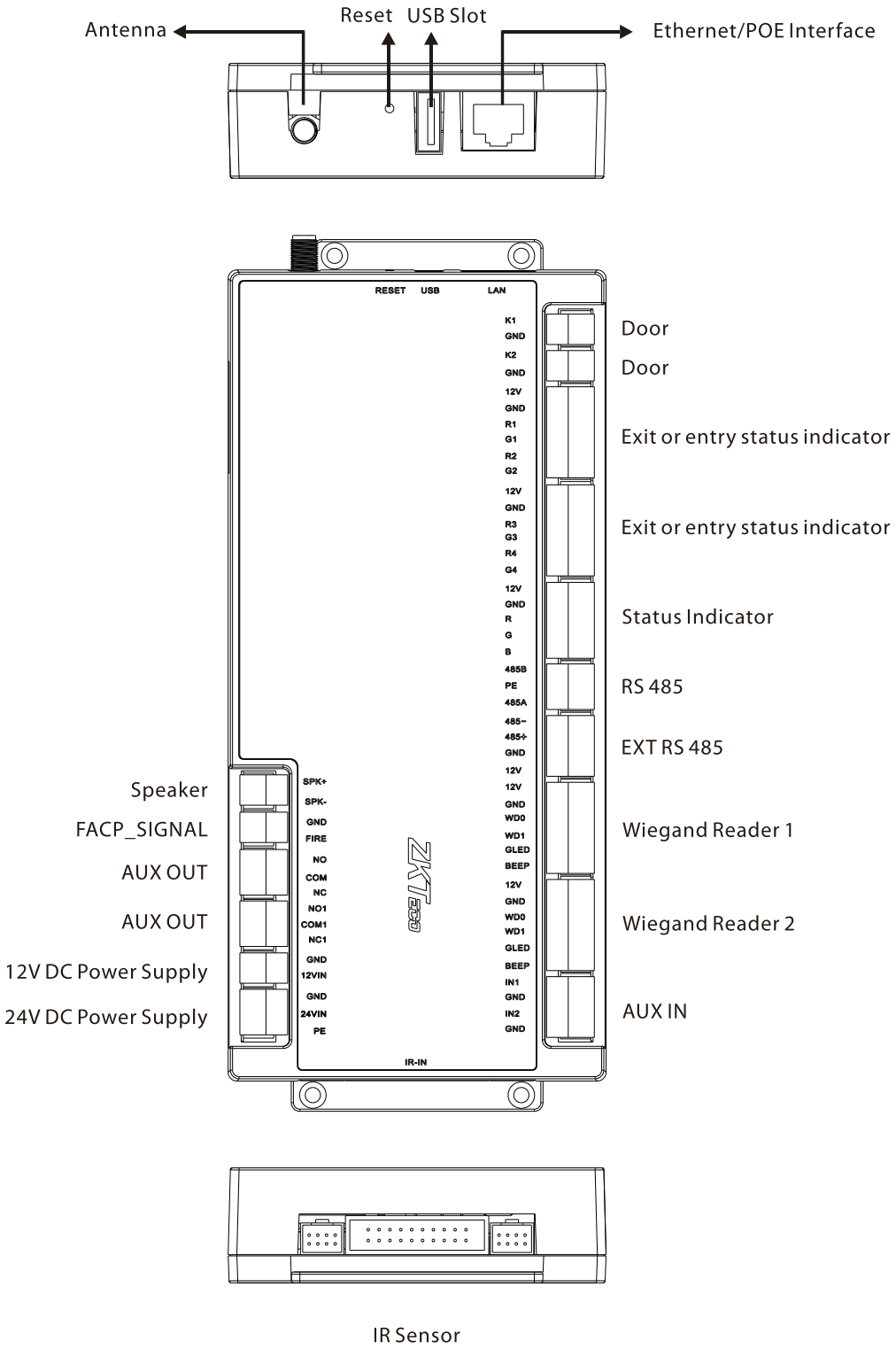

Copyright©2021 ZKTECO CO., LTD. All rights reserved.

4.2 Wiring Diagram and Functions

Check circuit according to the following wiring diagram:

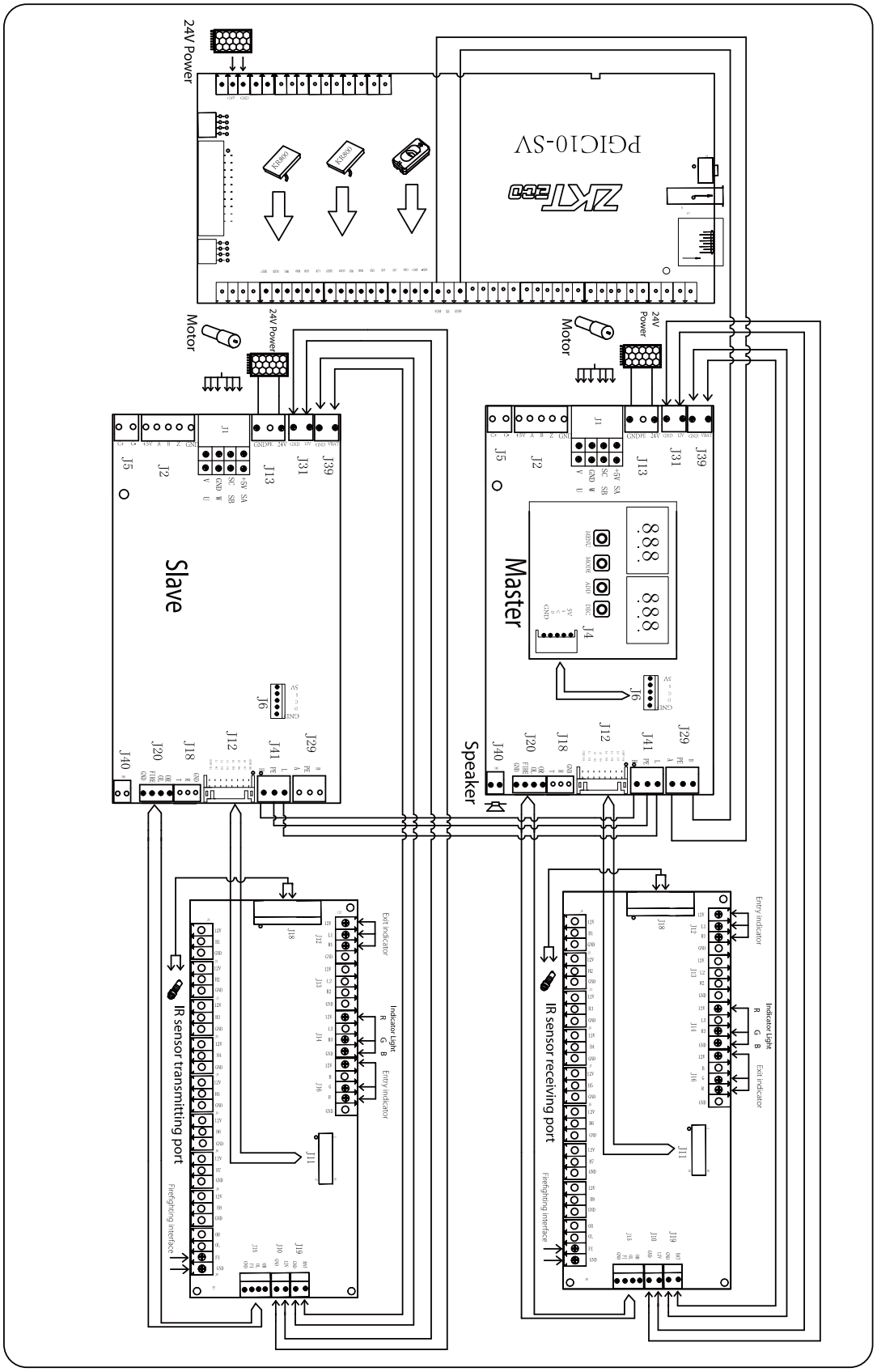

Copyright©2021 ZKTECO CO., LTD. All rights reserved.

The functions of all the terminals at each zone are as:

1. **System Power Input:** The voltage is changed by a transformer to 24V and supplied to the master control panel.
2. **Firefighting port:** It is used during emergencies ensuring users fast exit to safety.
3. **Right open (ADD button), left open (DEC button):** These buttons control the barrier to open to the left or right side.
4. **Access control power supply:** It supplies power for the access board.
5. **RS485 communication port:** It is used for receiving external signals.
6. **Electromagnetic clutch:** It is connected to the electromagnet inside the core component to prevent collision and crush.
7. **Connecting cable of the motor:** It is connected to the motor and supplies power to the electric motor.
8. **LED light:** It is connected to the light belt on the top of the device.
9. **IR Sensor:** It is connected to the swing arm/barrier to achieve anti-crush function.

Copyright©2021 ZKTECO CO., LTD. All rights reserved.

5 Connection with ZKBioSecurity

The backend PC software can exchange data and remotely manage the Mars-B1000 Series via the three protocols of INBIO-PGATES (TCP/IP, RS485, WIFI/4G).

5.1 TCP/IP Communication Settings

- **On the Device**

1. On the Main Menu, tap on **COMM** > **Ethernet** to set the Device IP address and Gateway. (**Note:** The IP address should be able to communicate with the ZKBioSecurity server, preferably in the same network segment with the server address)

2. On the Main Menu interface, tap on **COMM** > **Cloud Server** to set the server address and server port.

   Server address: Set the IP address of ZKBioSecurity server.

   Server port: Set the service port of ZKBioSecurity (The default is 8088).

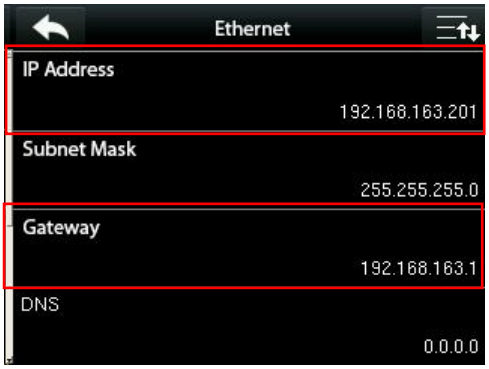

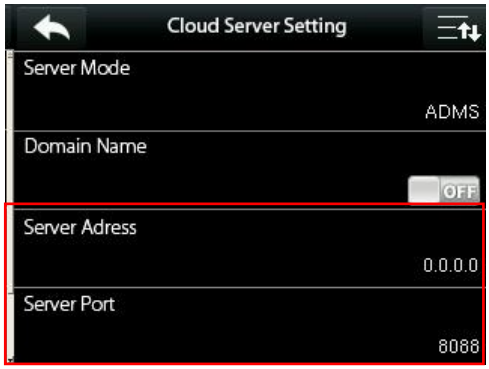

- **On the Software**

1. Connect the Mars-B1000 to the system, then open the ZKBioSecurity software, and then enter the user name and password (admin/admin), and click "login".
2. Login to ZKBioSecurity software, and then click **Entrance Control** > **Device** > **Search**, after searching, the list and total number of connected Entrance Control will be displayed.

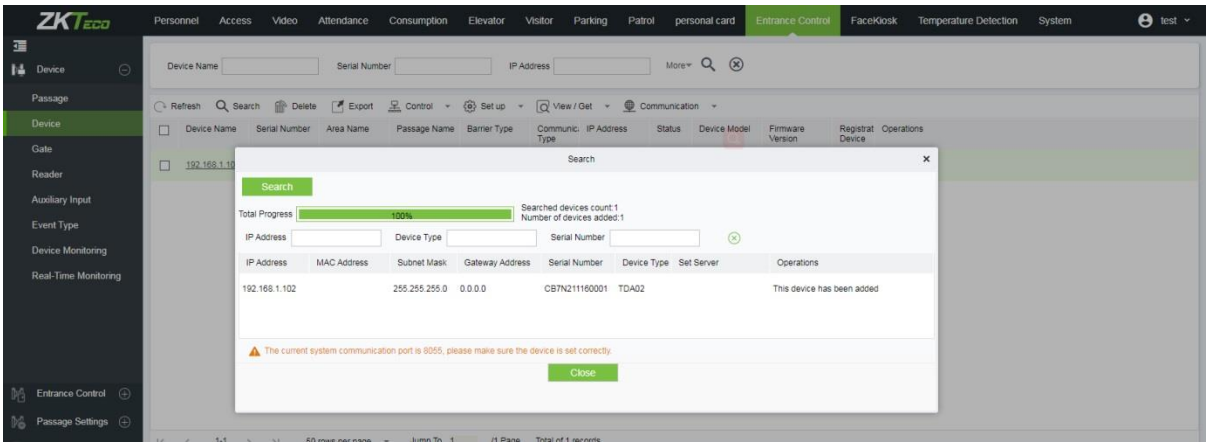

Copyright©2021 ZKTECO CO., LTD. All rights reserved.

5.2 WIFI Communication Settings

- **On the Device**

1. Tap on the required WI-FI network to be connected, then enter the password, then and tap **Connect to WI-FI** (OK) (follow the WI-FI setting procedure as explained earlier).

2. Click **Advanced Options** to set the WI-FI network parameters. (Note: The IP address should be able to communicate with the ZKBioSecurity server, preferably in the same network segment with the server address.)

3. On the **Main Menu** interface, click **COMM** > **Cloud Server** to set the server address and server port.

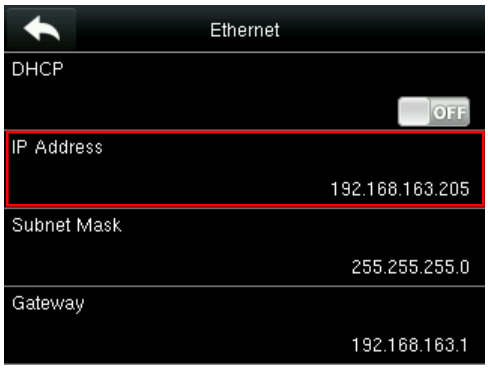

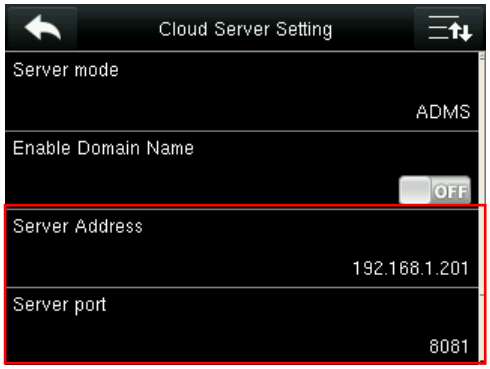

- **On the Software**

Login to ZKBioSecurity software, and then click **System** > **Communication** > **Communication Device** to set the adms service port, as shown below.

1. **Select Channel, create a channel.**

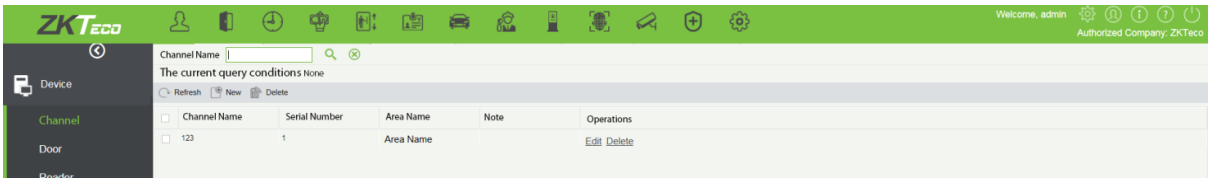

Copyright©2021 ZKTECO CO., LTD. All rights reserved.

2. **Add Device:** On the PC, login to ZKBioSecurity, then add controller through WI-FI on the **Device** interface, and then click **Search device** to add the controller to the software, as shown below.

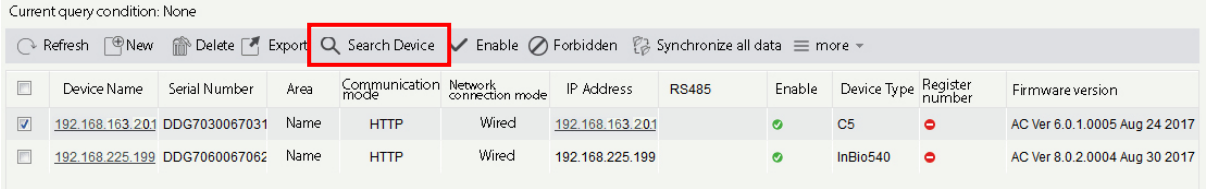

3. **Configure the Router:** Open the router in the region where the controller is located, as shown below.

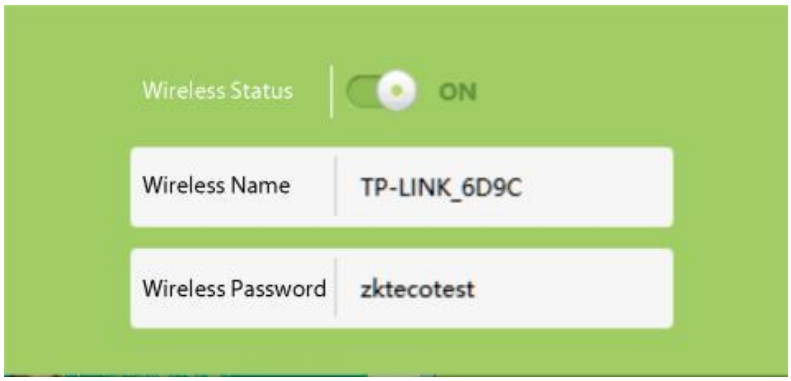

4. **Switch Network Connection:** On the **Device** interface, select an added controller and then click **More** > **Switch network connection** as shown below.

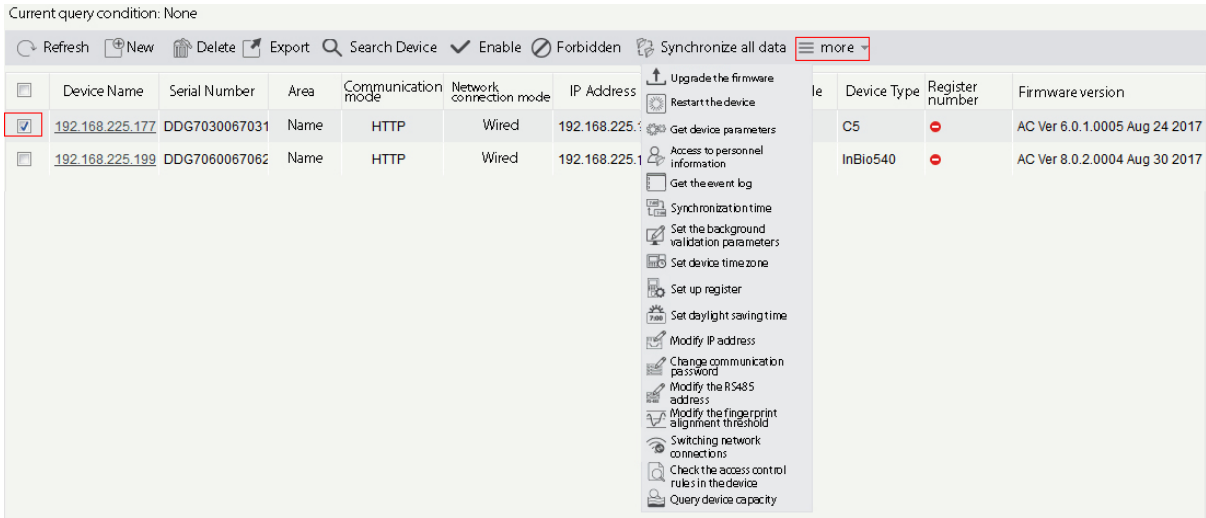

5. On the **Switch network connection**, click **WIFI** and the interface as shown below pops up. The wireless SSID and wireless key consistent with the router should be provided in the field, and then click **OK**.

Copyright©2021 ZKTECO CO., LTD. All rights reserved.

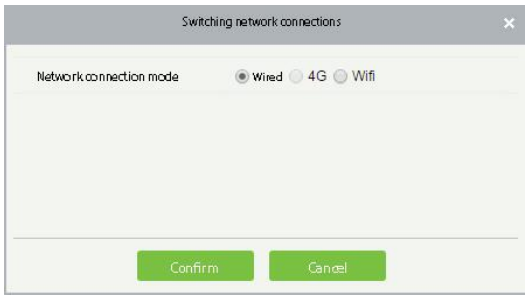

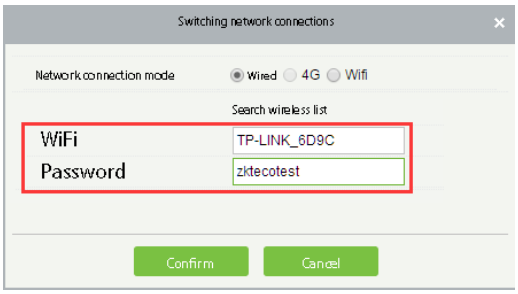

6. On the **Prompt** window, click **OK**, for successful connection and the controller will automatically restart.

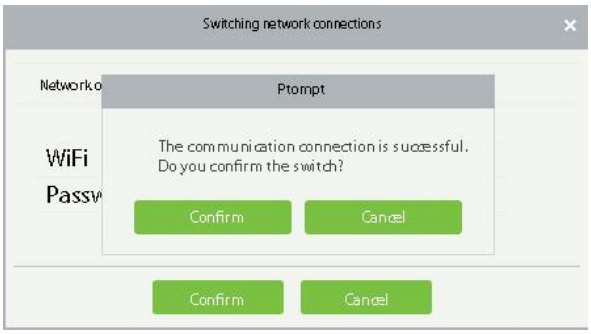

Note: The installed software should have the same network segment as the router.

5.3 4G Communication★

4G communication is an optional feature that is only available for some Devices.

1. Insert the (customer-owned) SIM card into the module.
2. Login to **ZKBioSecurity** software, then on the **Device** interface add the control panel through 4G.

Note: The network switch function allows switching between the wired network and WIFI or 4G rather than switch between WIFI and 4G.

- **Search and Add Device**
  1. Login to ZKBioSecurity software.
  2. Click **Access Control** > **Device** > **Search Device**, to open the Search interface.
  3. Click **Search**, and it will prompt [**Searching**……].
  4. After searching, the list and total number of connected access controllers will be displayed.

Copyright©2021 ZKTECO CO., LTD. All rights reserved.

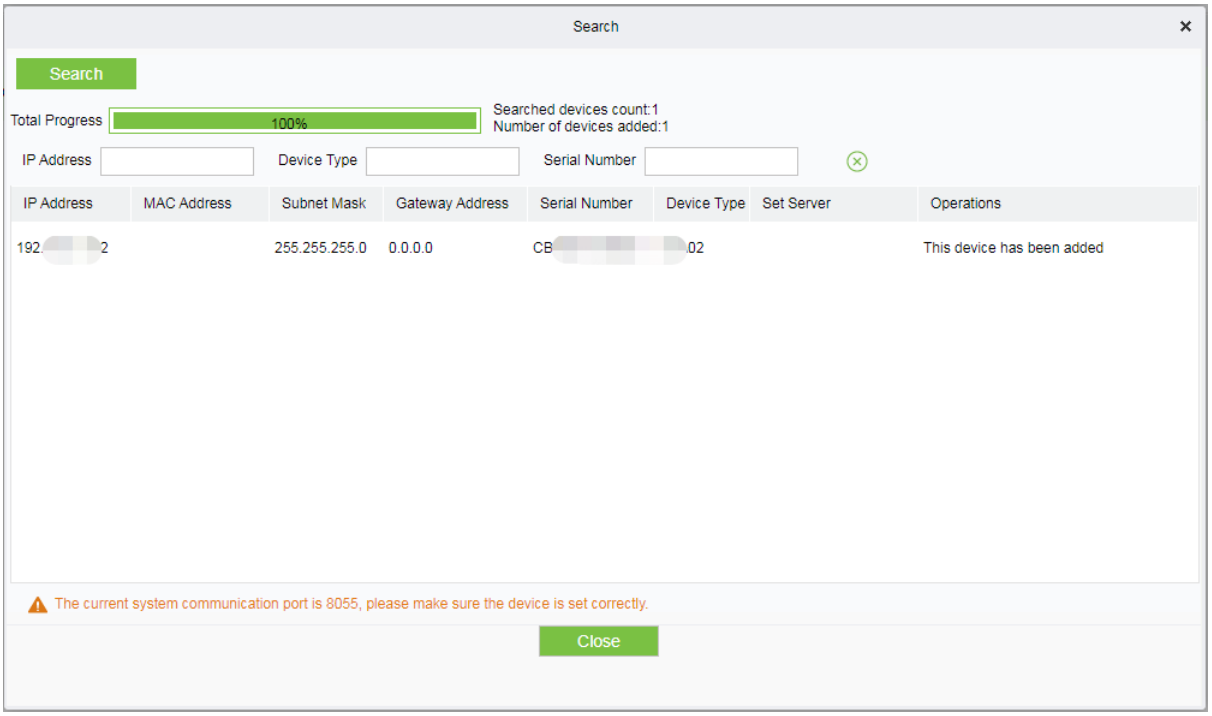

5. Click **Add** to add the required device from the search list.

Copyright©2021 ZKTECO CO., LTD. All rights reserved.

6 Personnel Management

1. On the Personnel interface, click **Personnel** > **Person** > **New** to add new personnel. The options include entering the User ID and Name, Department, Password, User Photo and Biological Template, etc.

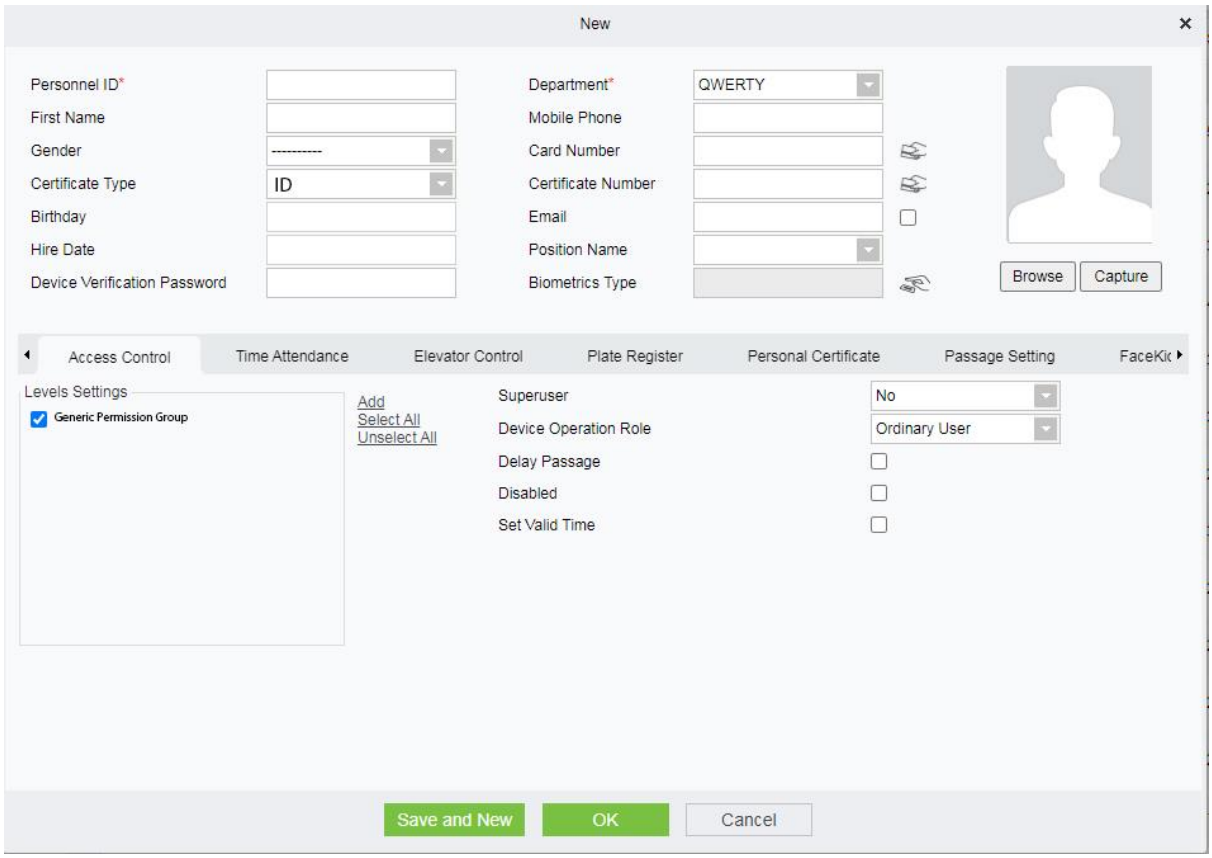

2. After setting all the parameters, click **OK**.
3. Synchronize personnel on the software to the devices in the corresponding area.
4. In the personnel list, select an employee(s) and click **More** > **Synchronize to Device** to access the confirmation interface for synchronizing.

Once the data synchronization is complete, the user can enter the swing barrier turnstile with a valid identity verification. For more details, please refer the **ZKBioSecurity** User Manual.

Copyright©2021 ZKTECO CO., LTD. All rights reserved.

7 Packing List

The package consists of the following items:

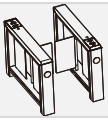	Mars-B1000	1 (master and slave)
	Power cable	1
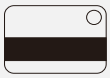	Card	1
	Expansion Screw M12*100	8

Copyright©2021 ZKTECO CO., LTD. All rights reserved.

8 Maintenance

8.1 Chassis Maintenance

The chassis is made up of cold rolled steel with powder coating. If it is used for substantial period, then there may be rust stains on its surface. Regularly sand the surface with a sandpaper carefully. Coat the surface with anti-rust oil and do not cover the infrared sensor.

8.2 Movement Maintenance

Switch off the power supply before maintenance. Open the door, clean surface dust, and apply lubricant for smooth movement.

8.3 Power Supply Maintenance

- Switch off the power supply before maintenance.
- Check the power plug connection, if found loose, fix it properly.
- Do not change any connection position randomly.
- Check the external power supply insulation periodically.
- Do periodic check for any kind of leakage.
- Check if the technical parameters of interface are normal.
- Check the service life of the electronic components and replace accordingly.

Caution: All the above-mentioned maintenance methods for swing barrier must be carried out by a professional technician, especially the movement and the electric control part. For ensuring operational safety, first switch off the power supply when the barrier is not in use.

Copyright©2021 ZKTECO CO., LTD. All rights reserved.

9 Troubleshooting

No.	Failure Description	Cause and Solution
1	No response from direction indicator or indication is not correct.	**Cause**: It may be due to the incorrect connection of indicator. **Solution**: Check whether the connection of the indicator is correct or not.
2	After swiping the card, there exists only swing arm action.	**Cause**: It may be due to the existing problem in the master and slave machine type setting. **Solution**: Check the master and slave machine type setting and the 5-core, 2-core connection line.
3	Delay in barrier opening or it doesn't close.	**Cause**: It may be due to the time of the barrier opening is set as too long. **Solution**: Check whether the time of the opening is too long, or the IR sensor is covered.
4	Motor doesn't rotate, the resistance is much, or the bearing is loose.	**Cause**: It may be due to the motor 's rotation angle is not set properly. **Solution**: The motor works properly, but the rotated angle is not sufficient, so it may cause loosening of bearing.
5	When powered ON, the swing doesn't return to the initial position.	**Cause**: It may be due to the obstacle that lies in the sensing area. **Solution**: Ensure that no obstacle is in the sensing area, then restart the equipment.

ZKTeco Industrial Park, No. 32, Industrial Road,

Tangxia Town, Dongguan, China.

Phone : +86 769 - 82109991

Fax : +86 755 - 89602394

www.zkteco.com

Copyright © 2021 ZKTECO CO., LTD. All Rights Reserved.